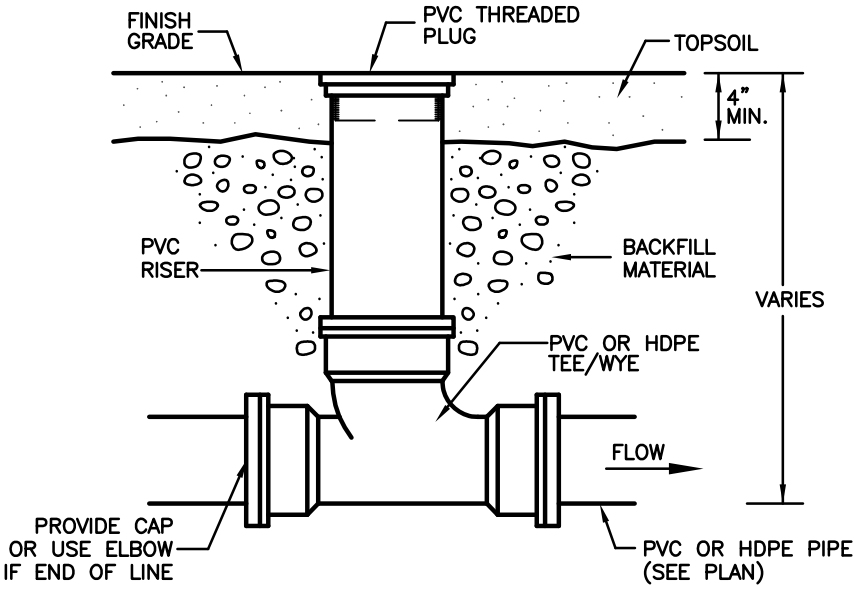

IN GRASS AREAS WITH NO TRAFFIC LOADING

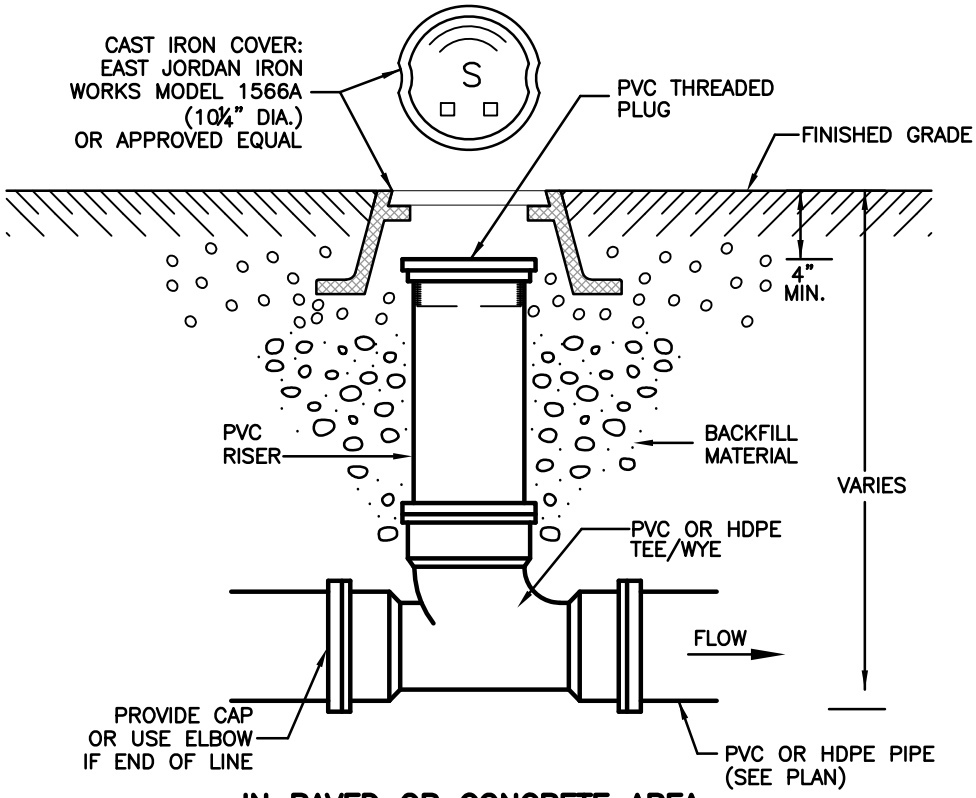

IN PAVED OR CONCRETE AREA

TYPICAL CLEAN-OUT DETAIL

NOT TO SCALE